TECHNICAL DATASHEET

RAK15000-09

chrome

Reference: RAK15000-09

Product: HARMONY single lever basin mixer

Product Description:

solid lever
single hole mounted
flow level 1 gpm#
PCA aerator M24 x 1
ceramic cartridge with hot water safety device
pop up waste 1 1/4 inch
flexible high pressure supply tubes 1/2 inch
rapid installation set
in accordance to EN 817
Pressure Compensating Aerator 1 gpm#

Advertisement:

* KLUDI RAK LLC item no. RAK15000-09
* chrome plated brass, in accordance to EN 50930-6
* in accordance to EN 817
* ceramic cartridge with hot water safety device Ø 35 mm

single lever basin mixer, manufacturer KLUDI RAK LLC item no. RAK15000-09, DN 15, chrome plated brass, ceramic cartridge with hot water safety device Ø 35 mm, solid lever, noise level DIN EN 4109 group I, report no. P-IX, type: single lever basin mixer DN 15, flow level 1 gpm, PCA aerator M24 x 1, flexible high pressure supply tubes 1/2 inch, with DVGW/KIWA/WRAS approval, with metal body length 380 mm, nozzle projection 116 mm, nozzle height 93 mm, lever projection 83 mm, rapid installation set, overall height 165 mm, for pressure type water heater, for continuous line heater

Line Drawing:

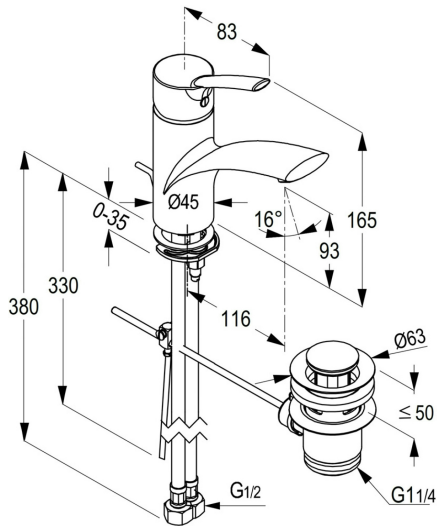

Water Flow Rate#:

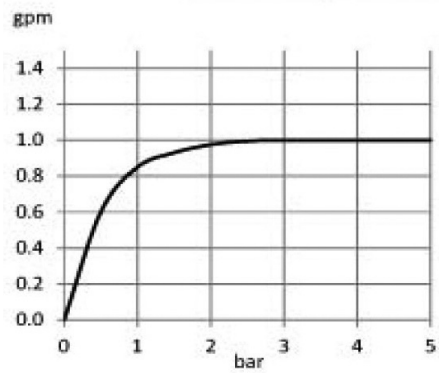

 # variation: ± 15%

RAK15000-09 online

1/6/2021

KLUDI RAK

" We Stand for Water Saving "