TOTAL **Classic 2½B 1D**

Inset Stainless Steel Sink

REFERENCE

REF: 10119081 EAN: 8421152031575

FEATURES

Stainless steel sink, Two bowls One auxiliary bowl and One drainer
Finish: Polished
Inset installation, Reversible drainer
3½" manual basket wastes with overflow and siphon
100 cm base unit
Thickness: 0.8 mm
Packaging: Individual carton box

Lifetime warranty

Hygiene

DIMENSIONS

Product height (mm):
Product width (mm): 500
Product depth (mm): 190
Product length (mm): 1400
Net weight (Kg): 8,13
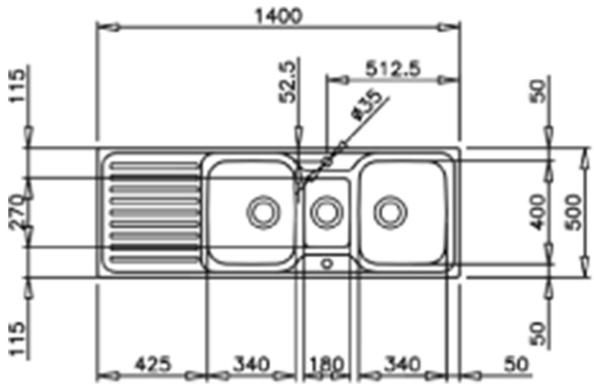
COLOURS